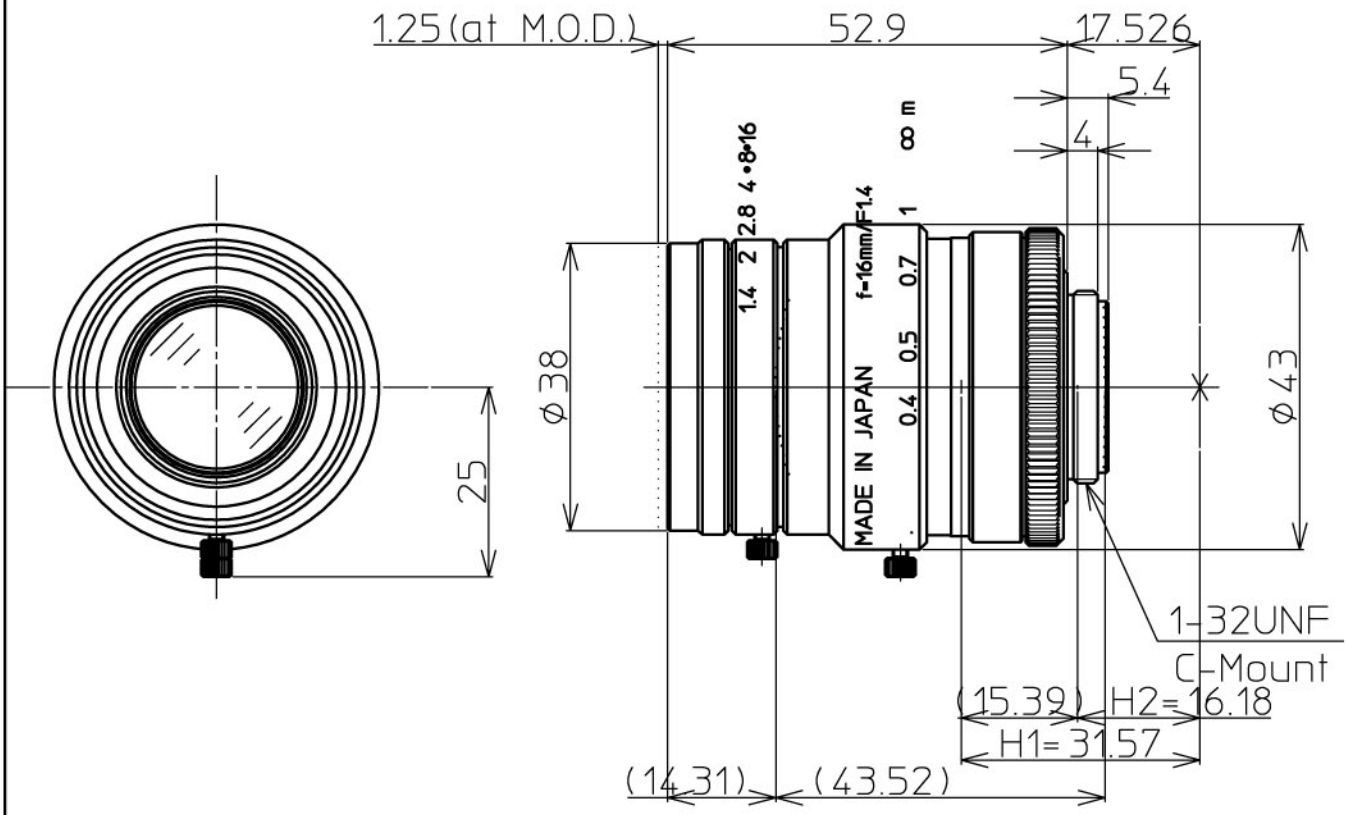

1" 1.4/16mm		2/3"	1/2"
FOCAL LENGTH	f=16mm		
MAX. DIAMETER (RATIO)	F=1:1.4~16		
PICTURE SIZE	12.8x9.6mm	8.8x6.6	6.4x4.8
ANGLE VER. ANGLE	33.6°	23.2°	16.9°
HOR. ANGLE	44.3°	30.8°	22.5°
DIA. ANGLE	54.4°	38.3°	28.1°
DISTORTION (TV)	-1.0%	-0.7%	-0.4%
MINIMUM FOCUS DISTANCE	0.3m		
FLANGE BACK	17.526 mm in air		
BACK FOCUS	12.6mm in air		
FILTER SCREW SIZE	M35.5x0.5		
FRONT/REAR EFFECTIVE DIA.	Front Ø21.5mm Rear Ø18.8mm		
MOUNT	C-MOUNT		
EXIT PUPIL	-128.5mm		
TEMPERATURE RANGE	-10~+50° C		
STORAGE TEMPERATURE RANGE	-20~+60° C		
RESOLUTION	Center 120lp/mm Corner 80lp/mm		
WEIGHT	140g		

Kowa

2011.06.07

LM16HC

1" F1.4 f=16mm